FLUSSIRARI

NOVA SHINE

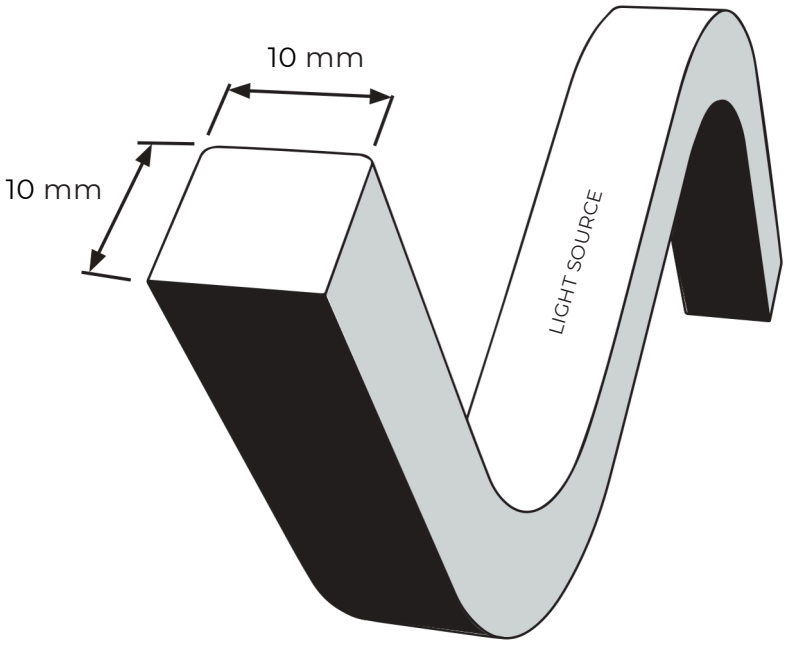

1.The most suitable operation temperature shall be -25°C to 45°C.

2.Please make sure that even during installation, the predetermined bending direction will never change. The product is TOP bending only, and it can't be twisted or side bending.

3.NOVA SHINE shall not be bent sharply and it may cause product damage.

4.The minimum bending diameter is 100mm, over bending will damage and void any warranty.

5.During the installation, it can not be:

-Twisted
-Dropped
-Bent at a 90°angle or bent at all
-Sagging/Hanging down

6.Please make sure the product does not stick with any paper related material directly.

7.For installation, 3 ways for your selection.

-Mounting clips
-Alumium profile
-PC profile

8.Install the product into profile carefully and correctly, taking out and re-assembling will most likely cause the product damaged.

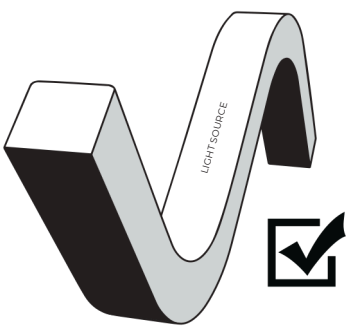

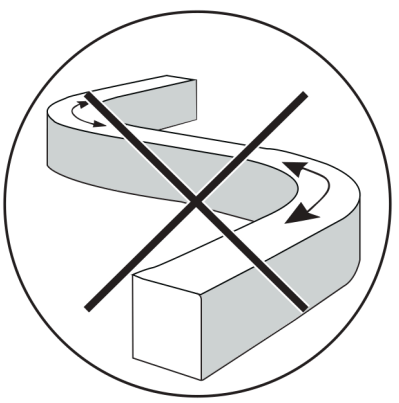

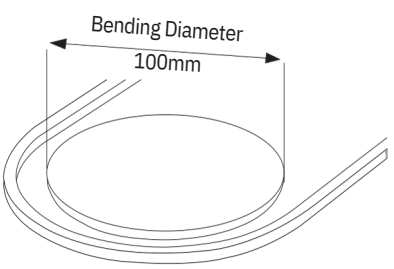

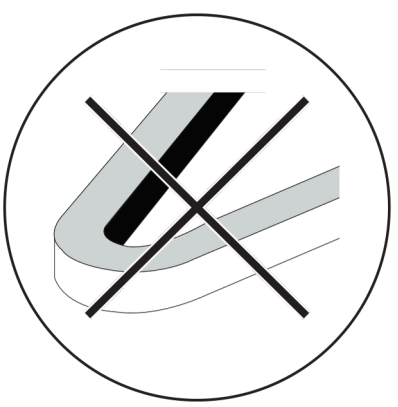

Bend too tight

Warranty: All LED light are warranted to be free from defects in product itself from the date of purchase.
Within this period, we, at its sole option, repair or replace any components which fail from correct use. Such repairs or replacement will be made at no charge to the customer for parts only, provided that the customer shall be responsible for transportation cost of the goods.
This warranty does not cover failures due to abuse, misuse, improper handling, act of nature, negligence, normal wear, accidental damage, modifications or repairs made by the purchaser or incorrect voltage conditions.

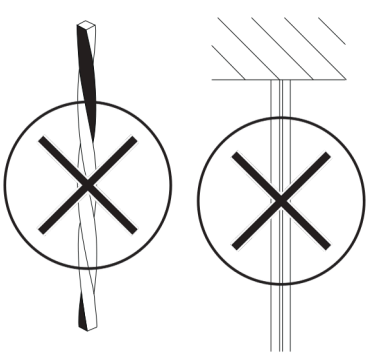

Do not twist Do not hang

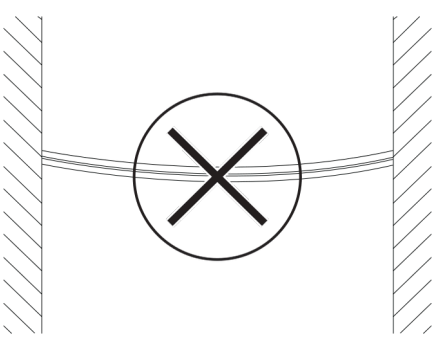

Do not droop

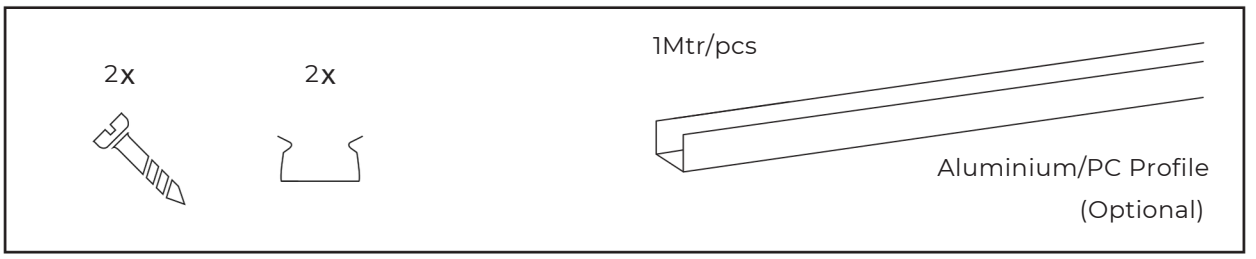

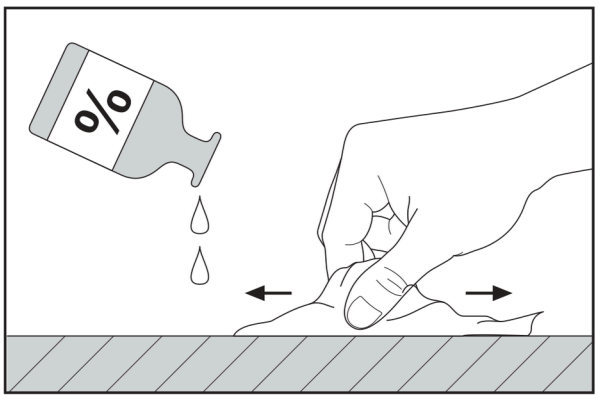

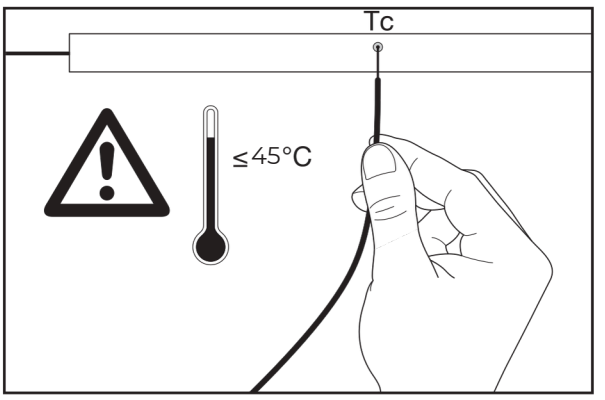

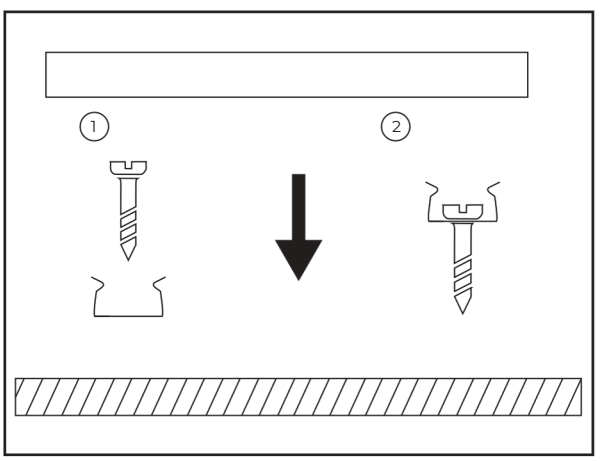

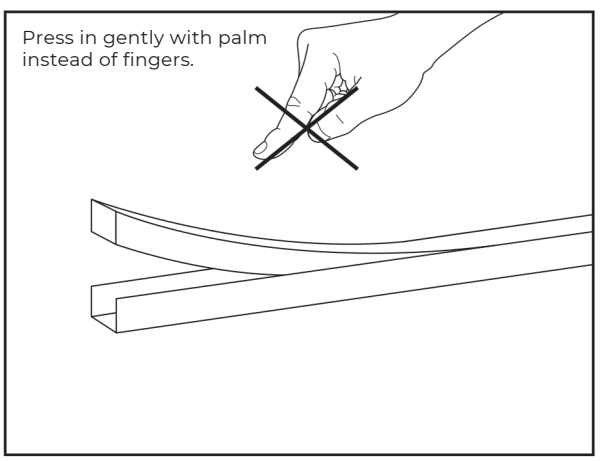

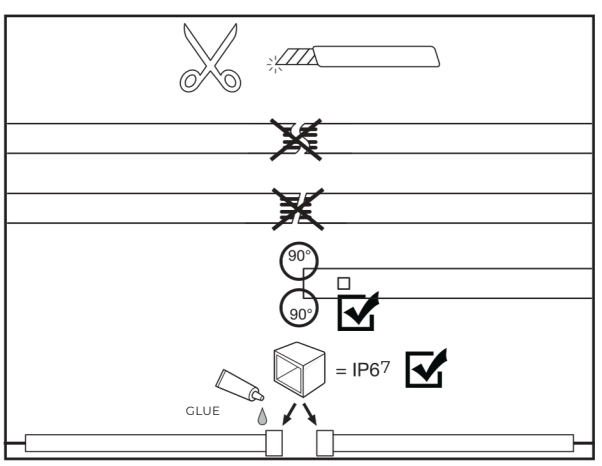

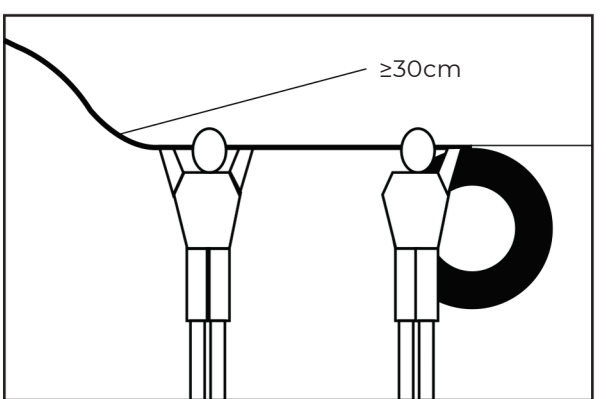

Two Person Installation